Data Sheet | Item Number: 750-452/000-200

2-channel analog input; 0 … 20 mA; Differential input; S5 PLC data format

https://www.wago.com/750-452/000-200

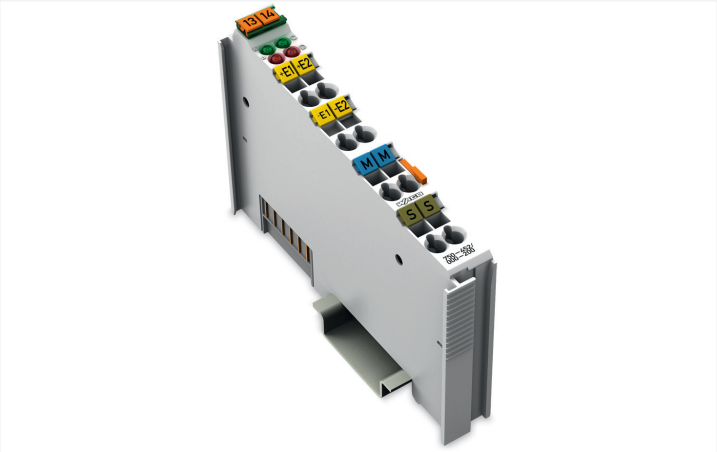

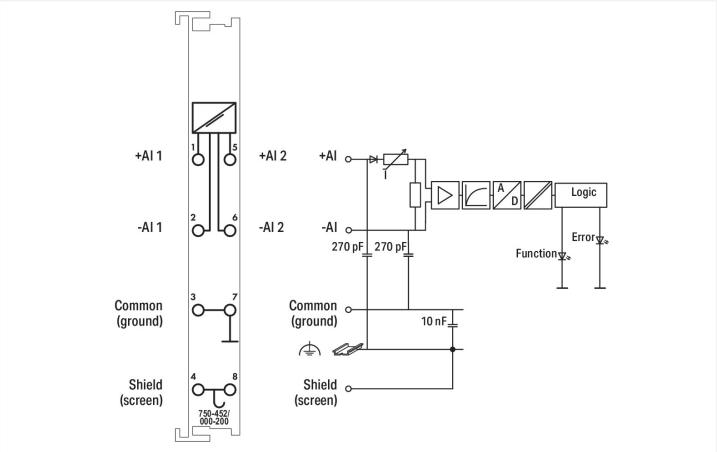

Color: light gray

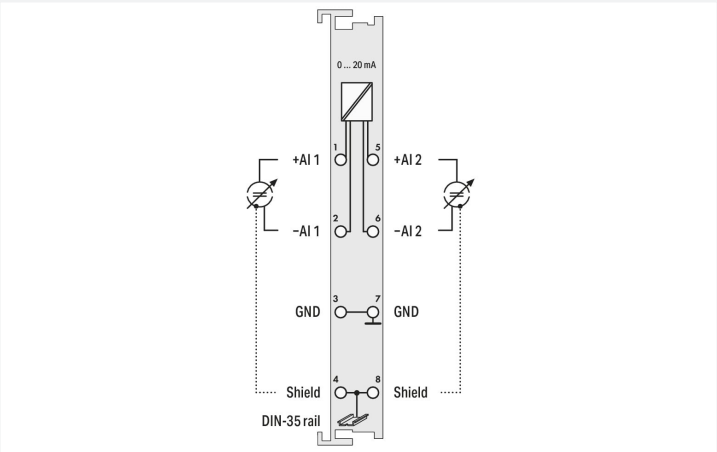

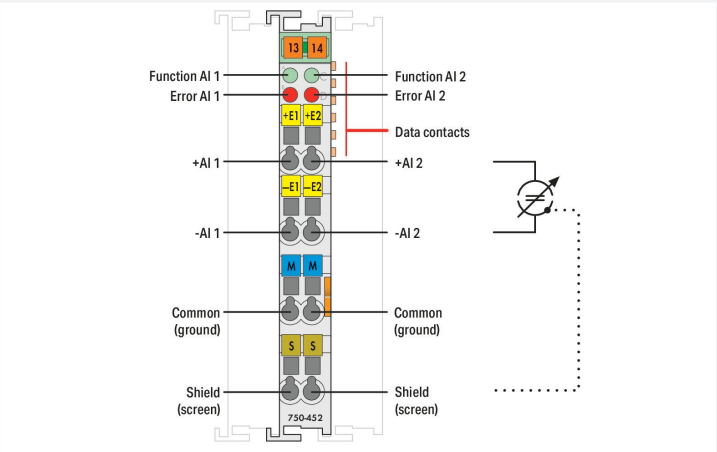

This analog input module processes standard 0–20 mA signals.
The input signal is electrically isolated and is transmitted with a resolution of 12 bits.
The internal system supply powers the module.
The input channels of the module are differential inputs.
The shield directly connects to the DIN-rail.

Technical data	
Number of analog inputs	2
Total number of channels (module)	2
Signal type	Current
Signal type (current)	0 … 20 mADC
Sensor connection	2 x (2-wire)
Input voltage (max.)	35 V
Signal characteristics	Differential
Resolution [bit]	12 bits
Input resistance (max.)	220 Ω
Data width	2 x 16-bit data; 2 x 8-bit control/status (optional)
Conversion time (typ.)	2 ms
Measurement error (reference temperature)	25 °C
Measurement error, deviation (max.) from the upper-range value	0.2 %
Temperature error (max.) of the upper-range value	0.01 %/K
Supply voltage (system)	5 VDC; via data contacts
Current consumption (5 V system supply)	70 mA
Isolation	500 V system/field
Indicators	LED (A, C) green: Function AI 1, AI 2; LED (B, D) red: Error AI 1, AI 2

 Continued on next page

Connection data

Connection technology: inputs/outputs	8 x CAGE CLAMP®
Connection type 1	Inputs/outputs
Solid conductor	0.08 … 2.5 mm² / 28 … 14 AWG
Fine-stranded conductor	0.08 … 2.5 mm² / 28 … 14 AWG
Strip length	8 … 9 mm / 0.31 … 0.35 inches

Physical data

Width	12 mm / 0.472 inches
Height	100 mm / 3.937 inches
Depth	69.8 mm / 2.748 inches
Depth from upper-edge of DIN-rail	62.6 mm / 2.465 inches

Mechanical data

Mounting type	DIN-35 rail

Material data

Color	light gray
Housing material	Polycarbonate; polyamide 6.6
Fire load	1 MJ
Weight	51 g
Conformity marking	CE

Environmental requirements

Ambient temperature (operation)	0 … +55 °C
Ambient temperature (storage)	-40 … +85 °C
Protection type	IP20
Pollution degree	2 per IEC 61131-2
Operating altitude	0 … 2000 m / 0 … 6562 ft
Mounting position	horizontal (standing/lying); vertical
Relative humidity (without condensation)	95 %
Vibration resistance	4g per IEC 60068-2-6
Shock resistance	15g per IEC 60068-2-27
EMC immunity to interference	per EN 61000-6-2, marine applications
EMC emission of interference	per EN 61000-6-4, marine applications
Exposure to pollutants	per IEC 60068-2-42 and IEC 60068-2-43
Permissible H_2S contaminant concentration at a relative humidity 75 %	10 ppm
Permissible SO_2 contaminant concentration at a relative humidity 75 %	25 ppm

Commercial data

Product Group	15 (I/O System)
eCl@ss 10.0	27-24-26-01
eCl@ss 9.0	27-24-26-01
ETIM 8.0	EC001596
ETIM 7.0	EC001596
PU (SPU)	1 pcs
Packaging type	Box
Country of origin	DE
GTIN	4045454484088
Customs tariff number	85389099990

 Continued on next page

Environmental Product Compliance

CAS-No.	1303-86-2 1317-36-8 25550-51-0 7439-92-1
REACH Candidate List Substance	4-Methyl-1,2-cyclohexanedicarboxylic anhydride Diboron trioxide Lead Lead monoxide
RoHS Compliance Status	Compliant,With Exemption
RoHS Exemption	6(c) 7(a) 7(c)-I 7(c)-II
SCIP notification number (Austria)	3bb7a7ab-bf97-42ca-95b2-683104f398fc
SCIP notification number (Belgium)	fd4b7126-4a5e-4bbe-9ed5-c401d7f6961d
SCIP notification number (Bulgaria)	d287fe18-3844-4cb0-902e-c464b81d8463
SCIP notification number (Czech Republic)	7aa6989b-8e43-4291-ba9c-bf9741523b0a
SCIP notification number (Denmark)	1695f547-6e47-494c-8de1-ca3b3d958760
SCIP notification number (Finland)	3763ad01-374e-4674-b74c-c0571a4ef50f
SCIP notification number (France)	dcd696b4-9d41-4658-8861-040ca015715c
SCIP notification number (Germany)	002d923b-895f-4675-8310-4d9d53aca338
SCIP notification number (Hungary)	392a3ace-f533-49e0-8b25-553f2d5f675a
SCIP notification number (Italy)	a3919c9b-7c76-4dd3-89af-11976d5cb933
SCIP notification number (Netherlands)	db56b8cd-9680-4f2a-bca5-5c7d3cca1f27
SCIP notification number (Poland)	3de55549-5aa0-4543-87c8-d4fc3142692c
SCIP notification number (Romania)	03e5d815-4224-4cb7-b7b9-b286caa6d98f
SCIP notification number (Sweden)	4451486f-9629-4f9b-9e21-ad0a112cf54d

Approvals / Certificates

General approvals

Approval	Standard	Certificate Name
EAC Brjansker Zertifizierungs-stelle	TP TC 020/2011	EAC RU C-DE.AM02.B.00087/19
KC National Radio Research Agency	Article 58-2, Clause 3	MSIP-REM-W43-AIM750
UL UL International Nether-lands B.V. (ORDINARY LO-CATIONS)	UL 508	E175199 Sec.1

Declarations of conformity and manufacturer's declarations

Approval	Standard	Certificate Name
EU-Declaration of Confor-mity WAGO GmbH & Co. KG	-	-
UK-Declaration of Confor-mity WAGO GmbH & Co. KG	-	-

Approvals for marine applications

Approval	Standard	Certificate Name
ABS American Bureau of Ship-ping	-	22-2219060
BSH Bundesamt fuer See-schifffahrt und Hydrogra-phie	-	1104

Approvals for marine applications

BV Bureau Veritas S.A.	-	13453/E0 BV
DNV DNV GL SE	DNV-CG-0339,Aug.2021	TAA0000194
KR Korean Register of Ship-ping	-	KR HMB05880-AC001
LR Lloyds Register EMEA	-	LR22180952TA
PRS Polski Rejestr Statków	-	TE/1101/880590/23
RINA RINA Germany GmbH	-	ELE343521XG001

 Continued on next page

Approvals for hazardous areas

Approval	Standard	Certificate Name
ATEX TUEV Nord Cert GmbH	EN 60079-0	TUEV14ATEX148929X (II 3 G Ex ec IIC T4 Gc)
CCCEx CQST/CNEx	CNCA-C23-01	2020312310000213 (Ex ec IIC T4 Gc)
EAC Brjansker Zertifizierungs-stelle	TP TC 012/2011	EAC RU C-DE.AM02. B.00163/19 (2Ex nA IIC T4 Gc X)
IECEx TUEV Nord Cert GmbH	IEC 60079-0	IECEx TUN 14.0035 X (Ex ec IIC T4 Gc)
INMETRO TÜV Rheinland do Brasil Ltda.	IEC 60079-0	TÜV 12.1297 X
UKEx WAGO GmbH & Co. KG	EN 60079-0	UKCA_WA GO22UKEX003X_ec
UL Underwriters Laboratories Inc. (HAZARDOUS LOCA-TIONS)	UL 121201	E198726 Sec.1

Downloads

Environmental Product Compliance

Compliance Search

Environmental Product Compliance 750-452/000-200

Documentation

Manual

Product Manual 2-channel, 0-20mA, diff.	V 1.1.0	pdf 2132.45 KB	
System Manual WAGO I/O System 750/753	V 3.3.3 29.08.2023	pdf 8512.61 KB	
System Manual Series 750/753			

System Description

750/753 Series I/O-System – General Pro-duct Information	pdf 953.35 KB	
Overview on WAGO-I/O-SYSTEM 750 appro-vals	pdf 770.48 KB	

Bid Text

750-452/000-200	19.02.2019	xml 4.41 KB	
750-452/000-200	17.10.2017	doc 28.00 KB	
750-452/000-200	17.10.2017	docx 16.90 KB	

Instruction Leaflet

CCC Ex (Additional in-formation)	26.04.2023	pdf 159.76 KB	

 Continued on next page

CAD/CAE-Data

CAD data	
2D/3D Models 750-452/000-200	

CAE data	
EPLAN Data Portal 750-452/000-200	
WSCAD Universe 750-452/000-200	
ZUKEN Portal 750-452/000-200	

Device Files

Device Driver			
WAGO USB Service Kabel Treiber / Serie 750 und 857	6.5.3.0 10.09.2014	zip 4721.96 KB	

1 Compatible Products

1.1 Optional Accessories

1.1.1 DIN-rail

1.1.1.1 Mounting accessories

Item No.: 210-196
Aluminum carrier rail; 35 x 8.2 mm; 1.6 mm thick; 2 m long; unslotted; similar to EN 60715; silver-colored

Item No.: 210-198
Copper carrier rail; 35 x 15 mm; 2.3 mm thick; 2 m long; unslotted; according to EN 60715; copper-colored

Item No.: 210-508
Steel carrier rail; 35 x 15 mm; 1.5 mm thick; 2 m long; slotted; galvanized; similar to EN 60715; silver-colored

Item No.: 210-197
Steel carrier rail; 35 x 15 mm; 1.5 mm thick; 2 m long; slotted; similar to EN 60715; silver-colored

Item No.: 210-506
Steel carrier rail; 35 x 15 mm; 1.5 mm thick; 2 m long; unslotted; galvanized; similar to EN 60715; silver-colored

Item No.: 210-114
Steel carrier rail; 35 x 15 mm; 1.5 mm thick; 2 m long; unslotted; similar to EN 60715; silver-colored

Item No.: 210-118
Steel carrier rail; 35 x 15 mm; 2.3 mm thick; 2 m long; unslotted; according to EN 60715; silver-colored

Item No.: 210-115
Steel carrier rail; 35 x 7.5 mm; 1 mm thick; 2 m long; slotted; according to EN 60715; "Hole width 18 mm; silver-colored

Item No.: 210-112
Steel carrier rail; 35 x 7.5 mm; 1 mm thick; 2 m long; slotted; according to EN 60715; "Hole width 25 mm; silver-colored

Item No.: 210-504
Steel carrier rail; 35 x 7.5 mm; 1 mm thick; 2 m long; slotted; galvanized; according to EN 60715; silver-colored

Item No.: 210-113
Steel carrier rail; 35 x 7.5 mm; 1 mm thick; 2 m long; unslotted; according to EN 60715; silver-colored

Item No.: 210-505
Steel carrier rail; 35 x 7.5 mm; 1 mm thick; 2 m long; unslotted; galvanized; according to EN 60715; silver-colored

1.1.2 Marking

1.1.2.1 Group marker carrier

Item No.: 750-106
Group marker carrier

 Continued on next page

1.1.2.2 Marker

Item No.: 750-100
Marker card; as a DIN A4 sheet; plain

Item No.: 2009-145/000-006
Mini-WSB Inline; for Smart Printer; 1700 pieces on roll; stretchable 5 - 5.2 mm; plain; snap-on type; blue

Item No.: 2009-145/000-007
Mini-WSB Inline; for Smart Printer; 1700 pieces on roll; stretchable 5 - 5.2 mm; plain; snap-on type; gray

Item No.: 2009-145/000-023
Mini-WSB Inline; for Smart Printer; 1700 pieces on roll; stretchable 5 - 5.2 mm; plain; snap-on type; green

Item No.: 2009-145/000-012
Mini-WSB Inline; for Smart Printer; 1700 pieces on roll; stretchable 5 - 5.2 mm; plain; snap-on type; orange

Item No.: 2009-145/000-005
Mini-WSB Inline; for Smart Printer; 1700 pieces on roll; stretchable 5 - 5.2 mm; plain; snap-on type; red

Item No.: 2009-145/000-024
Mini-WSB Inline; for Smart Printer; 1700 pieces on roll; stretchable 5 - 5.2 mm; plain; snap-on type; violet

Item No.: 2009-145
Mini-WSB Inline; for Smart Printer; 1700 pieces on roll; stretchable 5 - 5.2 mm; plain; snap-on type; white

Item No.: 2009-145/000-002
Mini-WSB Inline; for Smart Printer; 1700 pieces on roll; stretchable 5 - 5.2 mm; plain; snap-on type; yellow

Item No.: 248-501/000-006
Mini-WSB marking card; as card; not stretchable; plain; snap-on type; blue

Item No.: 248-501/000-007
Mini-WSB marking card; as card; not stretchable; plain; snap-on type; gray

Item No.: 248-501/000-023
Mini-WSB marking card; as card; not stretchable; plain; snap-on type; green

Item No.: 248-501/000-017
Mini-WSB marking card; as card; not stretchable; plain; snap-on type; light green

Item No.: 248-501/000-012
Mini-WSB marking card; as card; not stretchable; plain; snap-on type; orange

Item No.: 248-501/000-005
Mini-WSB marking card; as card; not stretchable; plain; snap-on type; red

Item No.: 248-501/000-024
Mini-WSB marking card; as card; not stretchable; plain; snap-on type; violet

Item No.: 248-501
Mini-WSB marking card; as card; not stretchable; plain; snap-on type; white

Item No.: 248-501/000-002
Mini-WSB marking card; as card; not stretchable; plain; snap-on type; yellow

1.1.2.3 Marker carrier

Item No.: 750-103
Group marker carrier

1.1.3 Shield termination

1.1.3.1 Shield clamping saddles

Item No.: 790-108
Shield clamping saddle; 11 mm wide; diameter of compatible conductor; 3 … 8 mm

Item No.: 790-208
Shield clamping saddle; 12.4 mm wide; 3 … 8 mm

Item No.: 790-116
Shield clamping saddle; 19 mm wide; diameter of compatible conductor; 7 … 16 mm

Item No.: 790-216
Shield clamping saddle; 21.8 mm wide; 6 … 16 mm

Item No.: 790-124
Shield clamping saddle; 27 mm wide; diameter of compatible conductor; 6 … 24 mm

Item No.: 790-220
Shield clamping saddle; 30 mm wide; 6 … 20 mm

Item No.: 790-140
Shield clamping saddle; diameter of compatible conductor

 Continued on next page

1.1.4 System enclosure

1.1.4.1 System enclosure

Item No.: 850-825
IP65 enclosure; Aluminium (RAL 7032); WxHxD (160x100x160 mm); 9 x M12, 4 x M20

Item No.: 850-826
IP65 enclosure; Aluminium (RAL 7032); WxHxD (240x100x160 mm); 4 x M20, 4 x M16, 14 x M12 cable grip

Item No.: 850-827
IP65 enclosure; Aluminium (RAL 7032); WxHxD (320x100x160 mm); 4 x M20, 8 x M16, 17 x M12 cable grip

Item No.: 850-828
IP65 enclosure; Aluminium (RAL 7032); WxHxD (480x100x160 mm); 4 x M20, 10 x M16, 35 x M12 cable grip

Item No.: 850-826/002-000
IP65 enclosure; Aluminium (RAL 7035); WxHxD (240x100x160 mm); 4 x M20, 4 x M16, 14 x M12 cable grip

Item No.: 850-827/002-000
IP65 enclosure; Aluminium (RAL 7035); WxHxD (320x100x160 mm); 4 x M20, 8 x M16, 17 x M12 cable grip

Item No.: 850-828/002-000
IP65 enclosure; Aluminium (RAL 7035); WxHxD (480x100x160 mm); 4 x M20, 10 x M16, 35 x M12 cable grip

Item No.: 850-834
IP65 enclosure; Polyester (RAL 7032); WxHxD (164x100x164 mm); 9 x M12, 4 x M20

Item No.: 850-835
IP65 enclosure; Polyester (RAL 7032); WxHxD (244x100x164 mm); 4 x M20, 4 x M16, 14 x M12 cable grip

Item No.: 850-836
IP65 enclosure; Polyester (RAL 7032); WxHxD (324x100x164 mm); 4 x M20, 8 x M16, 17 x M12 cable grip

Item No.: 850-814/002-000
IP65 enclosure; Sheet steel (RAL 7035); WxHxD (200x120x200 mm); without flange plate

Item No.: 850-815/002-000
IP65 enclosure; Sheet steel (RAL 7035); WxHxD (300x120x200 mm); without flange plate

Item No.: 850-816/002-000
IP65 enclosure; Sheet steel (RAL 7035); WxHxD (400x120x200 mm); without flange plate

Item No.: 850-817/002-000
IP65 enclosure; Sheet steel (RAL 7035); WxHxD (600x120x200 mm); without flange plate