# Data Sheet | Item Number: 750-469/000-006

2-channel analog input; Thermocouple J; Diagnostics

https://www.wago.com/750-469/000-006

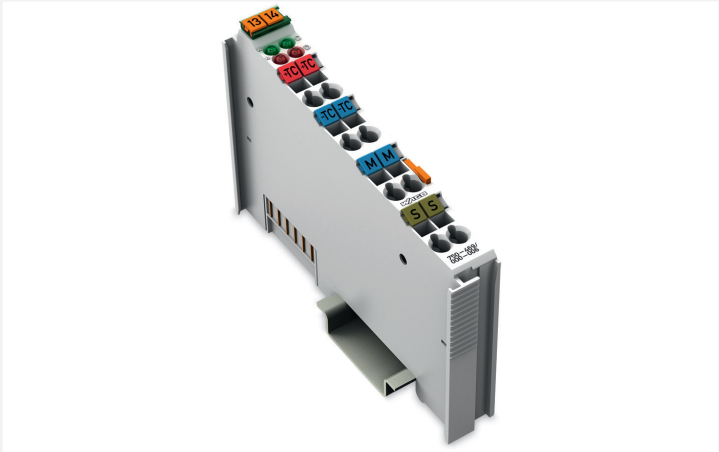

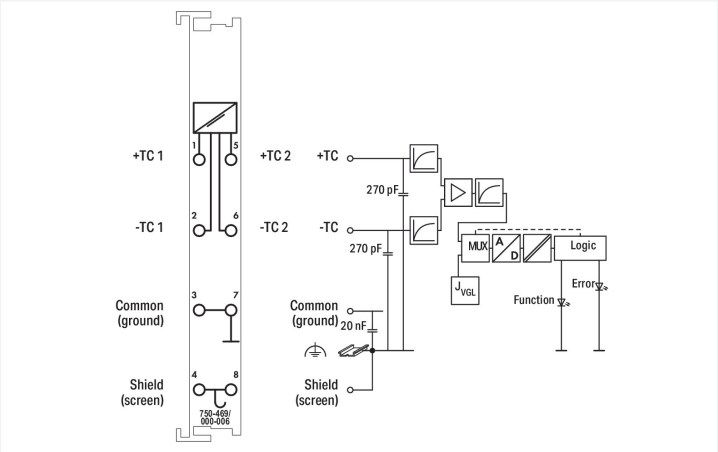


Color: light gray

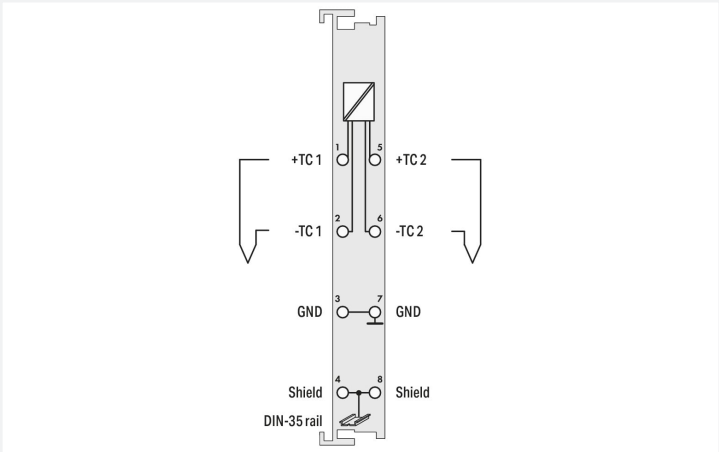


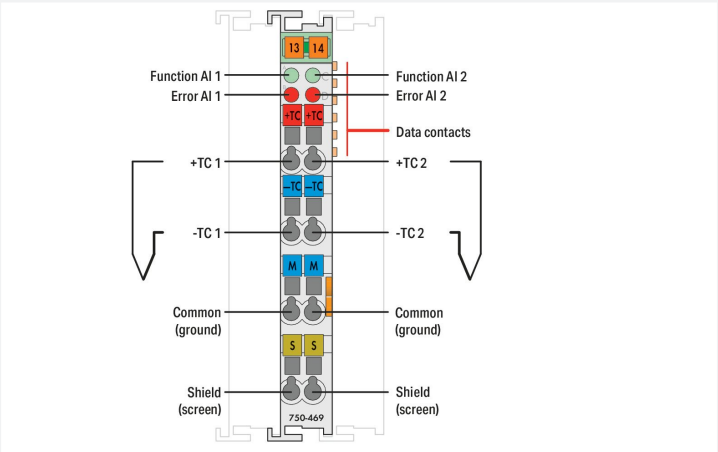


This analog input module directly connects to two thermocouples. Internal electrical isolation allows operation of grounded sensors.
The module automatically linearizes the entire temperature range.
Cold junction compensation mitigates the clamping unit offset voltage over the 0–55°C operating range.
A line break is indicated by a red LED. A green LED indicates readiness for operation and error-free communication with the coupler.
The shield directly connects to the DIN-rail.

| Technical data | |
|---|---|
| Number of analog inputs | 2 |
| Total number of channels (module) | 2 |
| Signal type | Thermocouple |
| Sensor connection | 2 x (2-wire) |
| Data width | 2 x 16-bit data; 2 x 8-bit control/status (optional) |
| Internal resistance | 1000 kΩ |
| Resolution (over entire range) | 0.1 °C |
| Conversion time (typ.) | 320 ms |
| Measurement error (25 °C) | < ±6 K (voltage input < ±2 K; cold junction compensation < ±4 K) |
| Temperature coefficient | < ±0.2 K/K |
| Sensor types | Thermocouple J |
| Temperature range | −100 … +1200 °C |
| Cold junction compensation | at each pair of terminal blocks |
| Supply voltage (system) | 5 VDC; via data contacts |
| Current consumption (5 V system supply) | 65 mA |
| Isolation | 500 V system/field |
| Indicators | LED (A, C) green: Function AI 1, AI 2; LED (B, D) red: Error AI 1, AI 2 |

 Continued on next page

## Connection data

| | |
|---|---|
| Connection technology: inputs/outputs | 8 x CAGE CLAMP® |
| Connection type 1 | Inputs/outputs |
| Solid conductor | 0.08 … 2.5 mm² / 28 … 14 AWG |
| Fine-stranded conductor | 0.08 … 2.5 mm² / 28 … 14 AWG |
| Strip length | 8 … 9 mm / 0.31 … 0.35 inches |

## Physical data

| | |
|---|---|
| Width | 12 mm / 0.472 inches |
| Height | 100 mm / 3.937 inches |
| Depth | 69.8 mm / 2.748 inches |
| Depth from upper-edge of DIN-rail | 62.6 mm / 2.465 inches |

## Mechanical data

| | |
|---|---|
| Mounting type | DIN-35 rail |

## Material data

| | |
|---|---|
| Color | light gray |
| Housing material | Polycarbonate; polyamide 6.6 |
| Fire load | 1.034 MJ |
| Weight | 51.7 g |
| Conformity marking | CE |

## Environmental requirements

| | |
|---|---|
| Ambient temperature (operation) | 0 … +55 °C |
| Ambient temperature (storage) | -40 … +85 °C |
| Protection type | IP20 |
| Pollution degree | 2 per IEC 61131-2 |
| Operating altitude | 0 … 2000 m / 0 … 6562 ft |
| Mounting position | horizontal (standing/lying); vertical |
| Relative humidity (without condensation) | 95 % |
| Vibration resistance | 4g per IEC 60068-2-6 |
| Shock resistance | 15g per IEC 60068-2-27 |
| EMC immunity to interference | per EN 61000-6-2, marine applications |
| EMC emission of interference | per EN 61000-6-4, marine applications |
| Exposure to pollutants | per IEC 60068-2-42 and IEC 60068-2-43 |
| Permissible $H_2S$ contaminant concentration at a relative humidity 75 % | 10 ppm |
| Permissible $SO_2$ contaminant concentration at a relative humidity 75 % | 25 ppm |

## Commercial data

| | |
|---|---|
| Product Group | 15 (I/O System) |
| eCl@ss 10.0 | 27-24-26-01 |
| eCl@ss 9.0 | 27-24-26-01 |
| ETIM 8.0 | EC001596 |
| ETIM 7.0 | EC001596 |
| PU (SPU) | 1 pcs |
| Packaging type | Box |
| Country of origin | DE |
| GTIN | 4045454393120 |
| Customs tariff number | 85389099990 |

 Continued on next page

## Environmental Product Compliance

| | |
|---|---|
| CAS-No. | 1303-86-2<br>1317-36-8<br>7439-92-1 |
| REACH Candidate List Substance | Diboron trioxide<br>Lead<br>Lead monoxide |
| RoHS Compliance Status | Compliant,With Exemption |
| RoHS Exemption | 6(c)<br>7(a)<br>7(c)-I<br>7(c)-II |
| SCIP notification number (Austria) | 00f805b1-33c5-4f84-92cc-8ae6a49d048c |
| SCIP notification number (Belgium) | 4477d235-4cb2-44bf-b96d-185076dd80a2 |
| SCIP notification number (Bulgaria) | 36bd7d72-405b-490e-94a1-2f0415879327 |
| SCIP notification number (Czech Republic) | 66ca2400-8f20-4064-bd9d-ce64a6b75a1c |
| SCIP notification number (Denmark) | a85fe808-d979-4a57-b3db-0bd11475b2bb |
| SCIP notification number (Finland) | 796d2f15-5ab9-4442-b2f3-c3d3b5054d03 |
| SCIP notification number (France) | 33cd4de6-0877-425b-9375-eb7e142e3266 |
| SCIP notification number (Germany) | ce0610a9-a686-43a7-ba44-347351151181 |
| SCIP notification number (Hungary) | 1ab3e18c-0ec4-48ef-9a5a-0928fb2ba8b2 |
| SCIP notification number (Italy) | f0924d37-e605-4c84-88d8-f79f3acd2d0f |
| SCIP notification number (Netherlands) | d169fada-0f82-4b98-b2b1-3c021080d5fb |
| SCIP notification number (Poland) | b6fcf463-99cb-48c4-bb6a-3581ec053501 |
| SCIP notification number (Romania) | 3511fa91-1d6e-4374-8b9f-2bf1f926901e |
| SCIP notification number (Sweden) | a2b68af6-6aff-4619-98f0-b5ff6be0ab15 |

## Approvals / Certificates

### General approvals

| Approval | Standard | Certificate Name |
|---|---|---|
| KC<br>National Radio Research Agency | Article 58-2, Clause 3 | MSIP-REM-W43-AIM750 |
| UL<br>UL International Netherlands B.V. (ORDINARY LOCATIONS) | UL 508 | E175199 Sec.1 |

### Declarations of conformity and manufacturer's declarations

| Approval | Standard | Certificate Name |
|---|---|---|
| EU-Declaration of Conformity<br>WAGO GmbH & Co. KG | - | - |
| UK-Declaration of Conformity<br>WAGO GmbH & Co. KG | - | - |

### Approvals for marine applications

| Approval | Standard | Certificate Name |
|---|---|---|
| ABS<br>American Bureau of Shipping | - | 22-2219060 |
| BSH<br>Bundesamt fuer Seeschifffahrt und Hydrographie | - | 1104 |
| BV<br>Bureau Veritas S.A. | - | 13453/E0 BV |
| DNV<br>DNV GL SE | DNV-CG-0339,Aug.2021 | TAA0000194 |

### Approvals for marine applications

| | | |
|---|---|---|
| KR<br>Korean Register of Shipping | - | KR HMB05880-AC001 |
| LR<br>Lloyds Register EMEA | - | LR22180952TA |
| PRS<br>Polski Rejestr Statków | - | TE/1101/880590/23 |
| RINA<br>RINA Germany GmbH | - | ELE343521XG001 |

 Continued on next page

## Approvals for hazardous areas

| Approval | Standard | Certificate Name |
|---|---|---|
| ATEX<br>TUEV Nord Cert GmbH | EN 60079-0 | TUEV14ATEX148929X (II 3 G Ex ec IIC T4 Gc) |
| CCCEx<br>CQST/CNEx | CNCA-C23-01 | 2020312310000213 (Ex ec IIC T4 Gc) |
| EAC<br>Brjansker Zertifizierungs-stelle | TP TC 012/2011 | EAC RU C-DE.AM02. B.00163/19 (2Ex nA IIC T4 Gc X) |
| IECEx<br>TUEV Nord Cert GmbH | IEC 60079-0 | IECEx TUN 14.0035 X (Ex ec IIC T4 Gc) |
| INMETRO<br>TÜV Rheinland do Brasil Ltda. | IEC 60079-0 | TÜV 12.1297 X |
| UKEx<br>WAGO GmbH & Co. KG | EN 60079-0 | UKCA_WA GO22UKEX003X_ec |
| UL<br>Underwriters Laboratories Inc. (HAZARDOUS LOCA-TIONS) | UL 121201 | E198726 Sec.1 |

## Downloads

### Environmental Product Compliance

| Compliance Search |
|---|
| Environmental Product Compliance 750-469/000-006 |

### Documentation

| Manual | | | |
|---|---|---|---|
| Product Manual 2-channel, thermocouples, line break detection | V 1.1.0 | pdf<br>2669.80 KB | |
| System Manual Series 750/753 | | | |

| System Description | | |
|---|---|---|
| 750/753 Series I/O-System – General Product Information | pdf<br>953.35 KB | |
| Overview on WAGO-I/O-SYSTEM 750 approvals | pdf<br>770.48 KB | |

| Bid Text | | | |
|---|---|---|---|
| 750-469/000-006 | 19.02.2019 | xml<br>4.66 KB | |
| 750-469/000-006 | 20.10.2017 | doc<br>28.50 KB | |

| Instruction Leaflet | | | |
|---|---|---|---|
| CCC Ex (Additional information) | 26.04.2023 | pdf<br>159.76 KB | |

 Continued on next page

## CAD/CAE-Data

| CAD data | CAE data |
|---|---|
| 2D/3D Models 750-469/000-006 | EPLAN Data Portal 750-469/000-006 |
| | WSCAD Universe 750-469/000-006 |
| | ZUKEN Portal 750-469/000-006 |

## Device Files

| Device Driver | | | |
|---|---|---|---|
| WAGO USB Service Kabel Treiber / Serie 750 und 857 | 6.5.3.0 10.09.2014 | zip 4721.96 KB | |

# 1 Compatible Products

## 1.1 Optional Accessories

### 1.1.1 DIN-rail

#### 1.1.1.1 Mounting accessories

Item No.: 210-196
Aluminum carrier rail; 35 x 8.2 mm; 1.6 mm thick; 2 m long; unslotted; similar to EN 60715; silver-colored

Item No.: 210-198
Copper carrier rail; 35 x 15 mm; 2.3 mm thick; 2 m long; unslotted; according to EN 60715; copper-colored

Item No.: 210-508
Steel carrier rail; 35 x 15 mm; 1.5 mm thick; 2 m long; slotted; galvanized; similar to EN 60715; silver-colored

Item No.: 210-197
Steel carrier rail; 35 x 15 mm; 1.5 mm thick; 2 m long; slotted; similar to EN 60715; silver-colored

Item No.: 210-506
Steel carrier rail; 35 x 15 mm; 1.5 mm thick; 2 m long; unslotted; galvanized; similar to EN 60715; silver-colored

Item No.: 210-114
Steel carrier rail; 35 x 15 mm; 1.5 mm thick; 2 m long; unslotted; similar to EN 60715; silver-colored

Item No.: 210-118
Steel carrier rail; 35 x 15 mm; 2.3 mm thick; 2 m long; unslotted; according to EN 60715; silver-colored

Item No.: 210-115
Steel carrier rail; 35 x 7.5 mm; 1 mm thick; 2 m long; slotted; according to EN 60715; "Hole width 18 mm; silver-colored

Item No.: 210-112
Steel carrier rail; 35 x 7.5 mm; 1 mm thick; 2 m long; slotted; according to EN 60715; "Hole width 25 mm; silver-colored

Item No.: 210-504
Steel carrier rail; 35 x 7.5 mm; 1 mm thick; 2 m long; slotted; galvanized; according to EN 60715; silver-colored

Item No.: 210-113
Steel carrier rail; 35 x 7.5 mm; 1 mm thick; 2 m long; unslotted; according to EN 60715; silver-colored

Item No.: 210-505
Steel carrier rail; 35 x 7.5 mm; 1 mm thick; 2 m long; unslotted; galvanized; according to EN 60715; silver-colored

### 1.1.2 Marking

#### 1.1.2.1 Group marker carrier

Item No.: 750-106
Group marker carrier

 Continued on next page

### 1.1.2.2 Marker

Item No.: 750-100
Marker card; as a DIN A4 sheet; plain

Item No.: 2009-145/000-006
Mini-WSB Inline; for Smart Printer; 1700 pieces on roll; stretchable 5 - 5.2 mm; plain; snap-on type; blue

Item No.: 2009-145/000-007
Mini-WSB Inline; for Smart Printer; 1700 pieces on roll; stretchable 5 - 5.2 mm; plain; snap-on type; gray

Item No.: 2009-145/000-023
Mini-WSB Inline; for Smart Printer; 1700 pieces on roll; stretchable 5 - 5.2 mm; plain; snap-on type; green

Item No.: 2009-145/000-012
Mini-WSB Inline; for Smart Printer; 1700 pieces on roll; stretchable 5 - 5.2 mm; plain; snap-on type; orange

Item No.: 2009-145/000-005
Mini-WSB Inline; for Smart Printer; 1700 pieces on roll; stretchable 5 - 5.2 mm; plain; snap-on type; red

Item No.: 2009-145/000-024
Mini-WSB Inline; for Smart Printer; 1700 pieces on roll; stretchable 5 - 5.2 mm; plain; snap-on type; violet

Item No.: 2009-145
Mini-WSB Inline; for Smart Printer; 1700 pieces on roll; stretchable 5 - 5.2 mm; plain; snap-on type; white

Item No.: 2009-145/000-002
Mini-WSB Inline; for Smart Printer; 1700 pieces on roll; stretchable 5 - 5.2 mm; plain; snap-on type; yellow

Item No.: 248-501/000-006
Mini-WSB marking card; as card; not stretchable; plain; snap-on type; blue

Item No.: 248-501/000-007
Mini-WSB marking card; as card; not stretchable; plain; snap-on type; gray

Item No.: 248-501/000-023
Mini-WSB marking card; as card; not stretchable; plain; snap-on type; green

Item No.: 248-501/000-017
Mini-WSB marking card; as card; not stretchable; plain; snap-on type; light green

Item No.: 248-501/000-012
Mini-WSB marking card; as card; not stretchable; plain; snap-on type; orange

Item No.: 248-501/000-005
Mini-WSB marking card; as card; not stretchable; plain; snap-on type; red

Item No.: 248-501/000-024
Mini-WSB marking card; as card; not stretchable; plain; snap-on type; violet

Item No.: 248-501
Mini-WSB marking card; as card; not stretchable; plain; snap-on type; white

Item No.: 248-501/000-002
Mini-WSB marking card; as card; not stretchable; plain; snap-on type; yellow

### 1.1.2.3 Marker carrier

Item No.: 750-103
Group marker carrier

## 1.1.3 Shield termination

### 1.1.3.1 Shield clamping saddles

Item No.: 790-108
Shield clamping saddle; 11 mm wide; diameter of compatible conductor; 3 … 8 mm

Item No.: 790-208
Shield clamping saddle; 12.4 mm wide; 3 … 8 mm

Item No.: 790-116
Shield clamping saddle; 19 mm wide; diameter of compatible conductor; 7 … 16 mm

Item No.: 790-216
Shield clamping saddle; 21.8 mm wide; 6 … 16 mm

Item No.: 790-124
Shield clamping saddle; 27 mm wide; diameter of compatible conductor; 6 … 24 mm

Item No.: 790-220
Shield clamping saddle; 30 mm wide; 6 … 20 mm

Item No.: 790-140
Shield clamping saddle; diameter of compatible conductor

 Continued on next page

## 1.1.4 System enclosure

### 1.1.4.1 System enclosure

Item No.: 850-825
IP65 enclosure; Aluminium (RAL 7032); WxHxD (160x100x160 mm); 9 x M12, 4 x M20

Item No.: 850-826
IP65 enclosure; Aluminium (RAL 7032); WxHxD (240x100x160 mm); 4 x M20, 4 x M16, 14 x M12 cable grip

Item No.: 850-827
IP65 enclosure; Aluminium (RAL 7032); WxHxD (320x100x160 mm); 4 x M20, 8 x M16, 17 x M12 cable grip

Item No.: 850-828
IP65 enclosure; Aluminium (RAL 7032); WxHxD (480x100x160 mm); 4 x M20, 10 x M16, 35 x M12 cable grip

Item No.: 850-826/002-000
IP65 enclosure; Aluminium (RAL 7035); WxHxD (240x100x160 mm); 4 x M20, 4 x M16, 14 x M12 cable grip

Item No.: 850-827/002-000
IP65 enclosure; Aluminium (RAL 7035); WxHxD (320x100x160 mm); 4 x M20, 8 x M16, 17 x M12 cable grip

Item No.: 850-828/002-000
IP65 enclosure; Aluminium (RAL 7035); WxHxD (480x100x160 mm); 4 x M20, 10 x M16, 35 x M12 cable grip

Item No.: 850-834
IP65 enclosure; Polyester (RAL 7032); WxHxD (164x100x164 mm); 9 x M12, 4 x M20

Item No.: 850-835
IP65 enclosure; Polyester (RAL 7032); WxHxD (244x100x164 mm); 4 x M20, 4 x M16, 14 x M12 cable grip

Item No.: 850-836
IP65 enclosure; Polyester (RAL 7032); WxHxD (324x100x164 mm); 4 x M20, 8 x M16, 17 x M12 cable grip

Item No.: 850-814/002-000
IP65 enclosure; Sheet steel (RAL 7035); WxHxD (200x120x200 mm); without flange plate

Item No.: 850-815/002-000
IP65 enclosure; Sheet steel (RAL 7035); WxHxD (300x120x200 mm); without flange plate

Item No.: 850-816/002-000
IP65 enclosure; Sheet steel (RAL 7035); WxHxD (400x120x200 mm); without flange plate

Item No.: 850-817/002-000
IP65 enclosure; Sheet steel (RAL 7035); WxHxD (600x120x200 mm); without flange plate